17

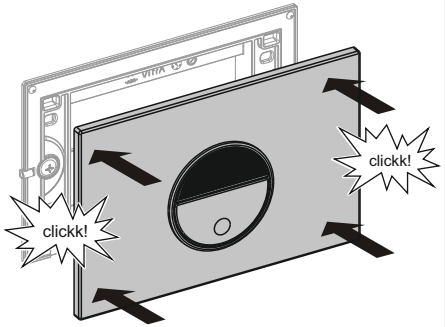

18

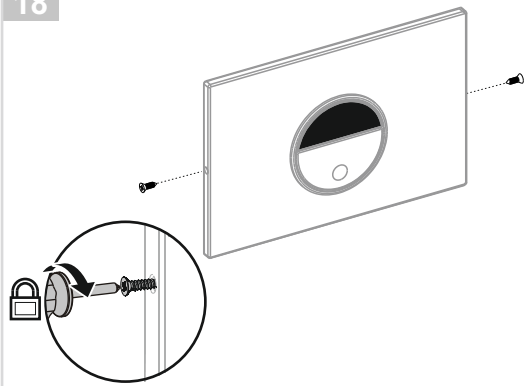

19

6L/4L

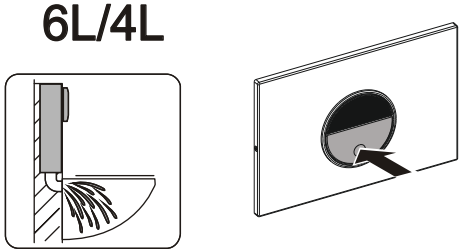

20

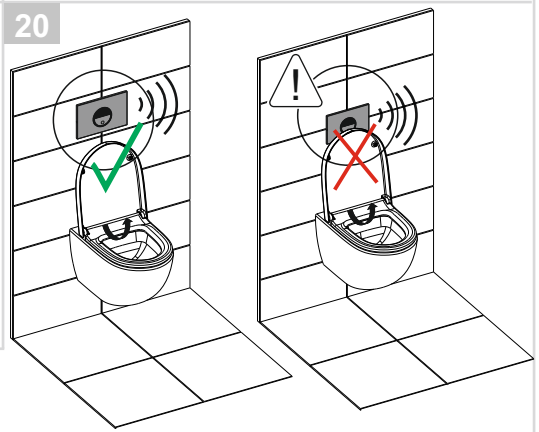

6L/4L

6-40 sn = 2.5L/3 L
40< sn = 4L/6 L

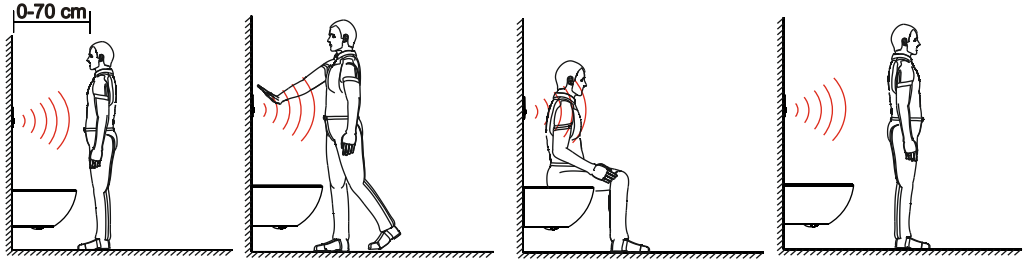

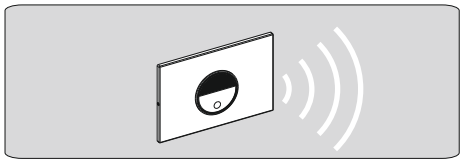

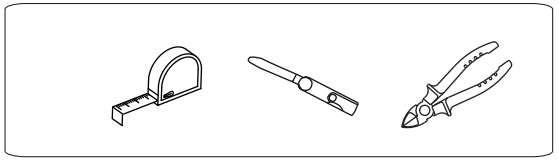

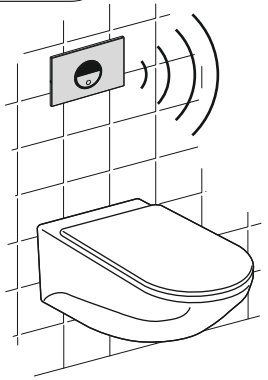

1

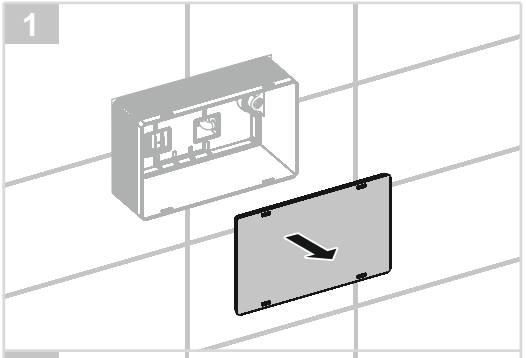

3

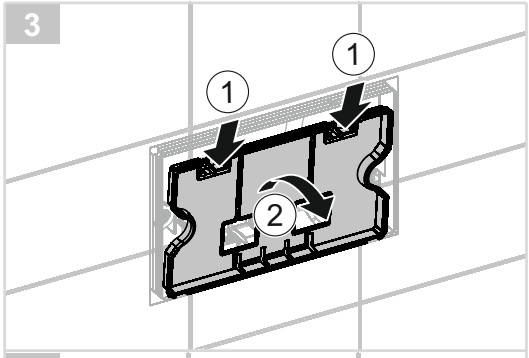

2

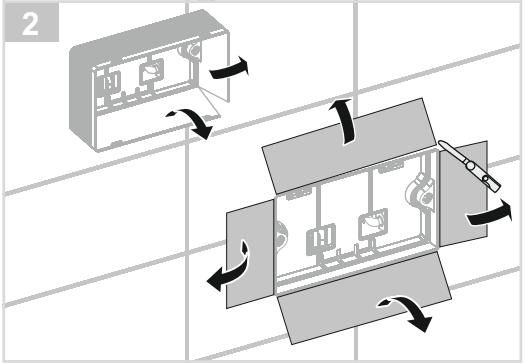

4

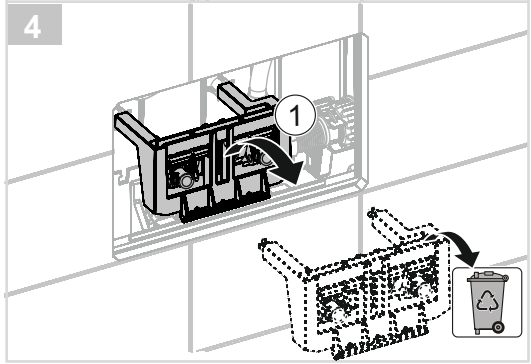

5

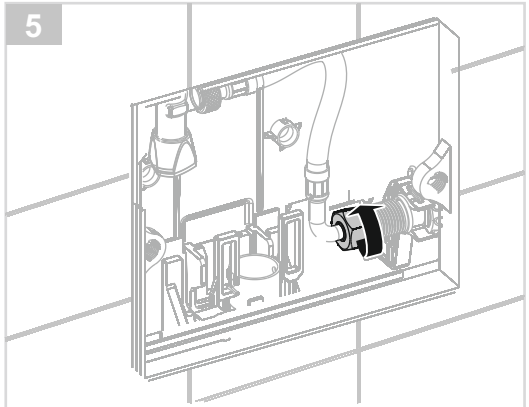

8

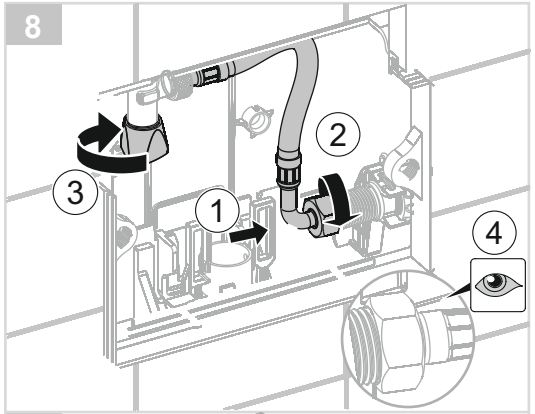

6

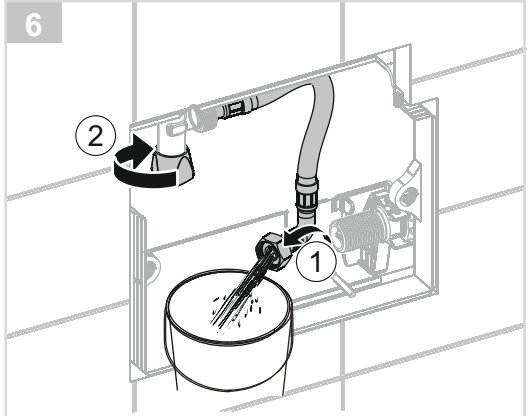

9

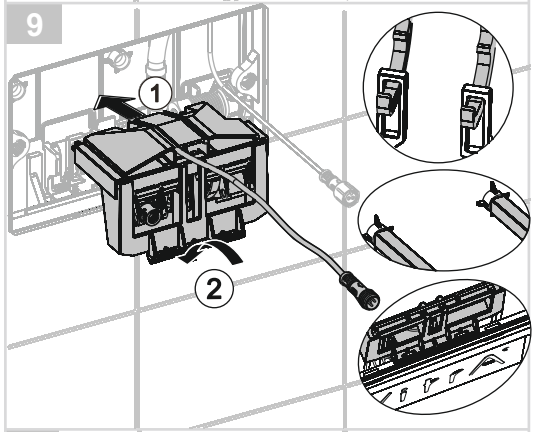

7

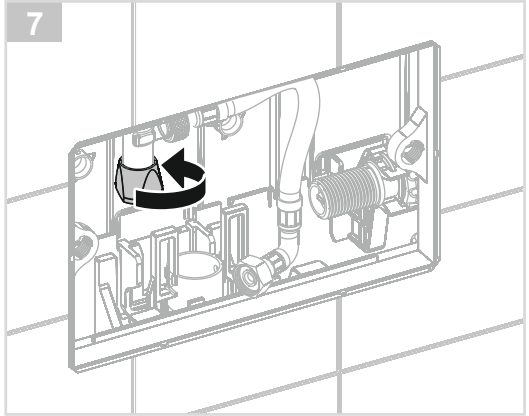

10

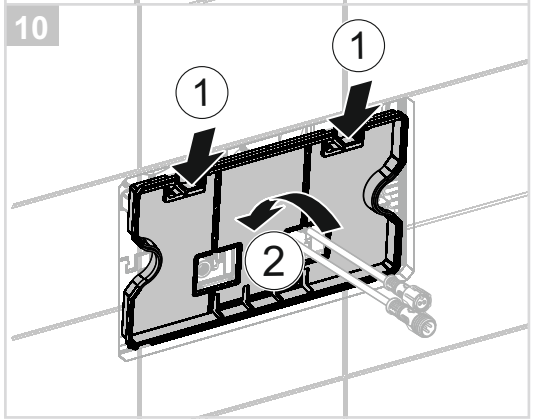

11

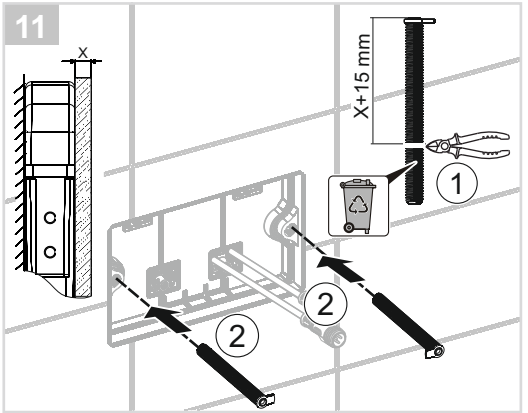

14

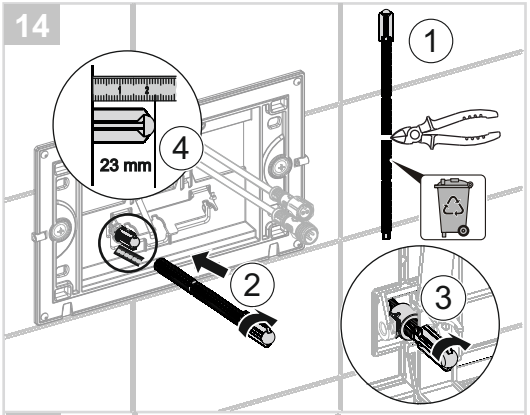

12

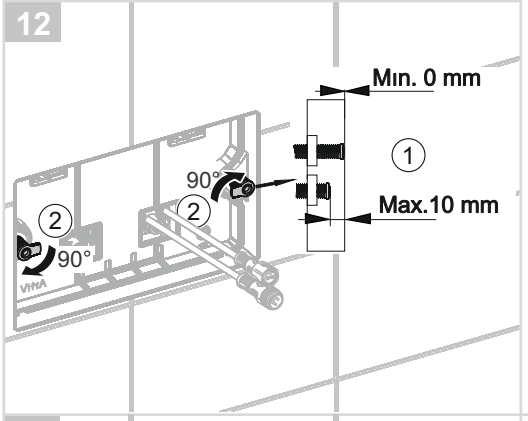

15

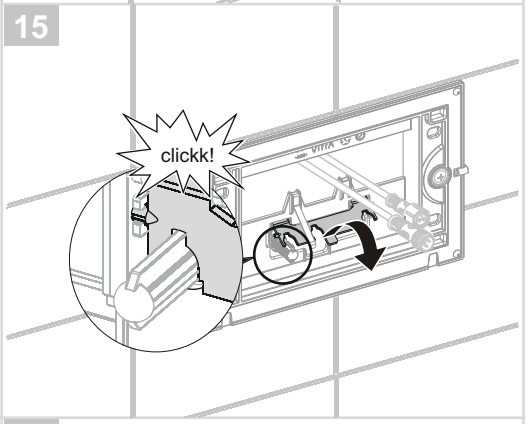

13

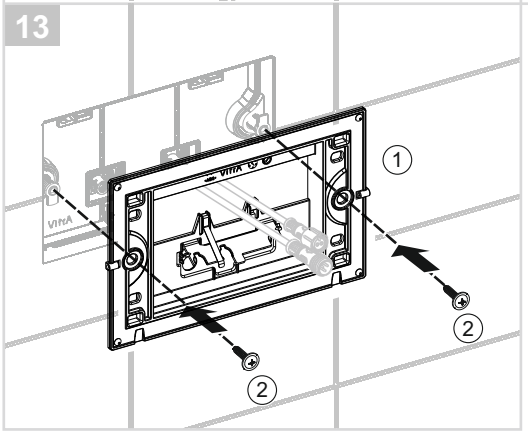
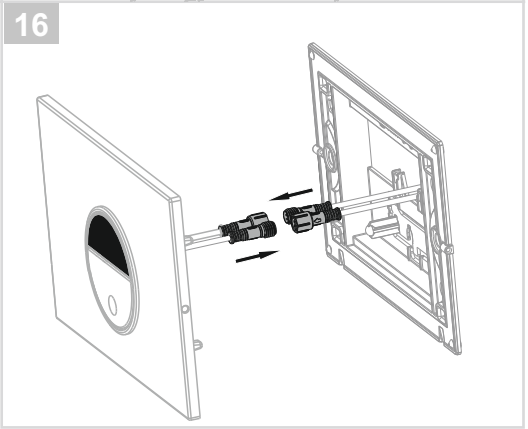
16